AS TECHNOLOGIES

AS TECHNOLOGIES GMBH · BOARD HANDLING

Loader & Unloader

Data sheets: magazine loaders and unloaders for automatic loading and unloading of SMT production lines.



6	M – XL	30+
MODULES	SIZES	YEARS OF EXPERIENCE

Product contents

MAGAZINE LOADER & UNLOADER

Multi Magazine Loader 03
Multi Magazine Unloader 05
Single Magazine Loader 07
Single Magazine Unloader 09

ADJUSTABLE LOADER & UNLOADER

Adjustable Multi Magazine Loader 11
Adjustable Multi Magazine Unloader 13

MAGAZINE LOADER & UNLOADER

Multi Magazine Loader

ML-250A-CT | ML-330A-CT | ML-390A-CT | ML-460A-CT

01 / 06



APPLICATION

The Multi Magazine Loader is used at the starting of the line for loading of PCBs to the production line. The unit loads the production line automatically by pushing PCBs out of a magazine onto the conveyor of the downstream machine.

FEATURES

- Controlled by Omron PLC.
- Easy operation by touch screen.
- Multiple pitches selectable.
- Automatic magazine change-over.
- Tower light display for machine status.
- 3 magazines loading capability.
- SMEMA interface.
- CE certified.

Multi Magazine Loader

SPECIFICATIONS

MODEL	ML-250A-CT	ML-330A-CT	ML-390A-CT	ML-460A-CT
Size	M	L	LL	XL
Power	AC 110/220V ±10V, 50/60 Hz			
Air Pressure	4 - 6 kgf/cm²			
Fixed Rail	Front			
PCB Size	350 × (50 - 250) mm	460 × (50 - 330) mm	535 × (50 - 390) mm	535 × (50 - 460) mm
Transfer Height	900 ±20 mm or Specify			
Transfer Direction	left to right or right to left (option)			
Magazine Rack Size	350 × 320 × 563 mm	460 × 400 × 563 mm	535 × 460 × 570 mm	535 × 530 × 570 mm
Pitches	1 - 50, 10 mm pitch			
Machine Dimension	1365 × 765 × 1200 mm	1650 × 850 × 1200 mm	1745 × 910 × 1200 mm	1745 × 980 × 1200 mm
Machine Weight	220 kg	240 kg	260 kg	270 kg

* Other options available on request.

DIMENSIONS

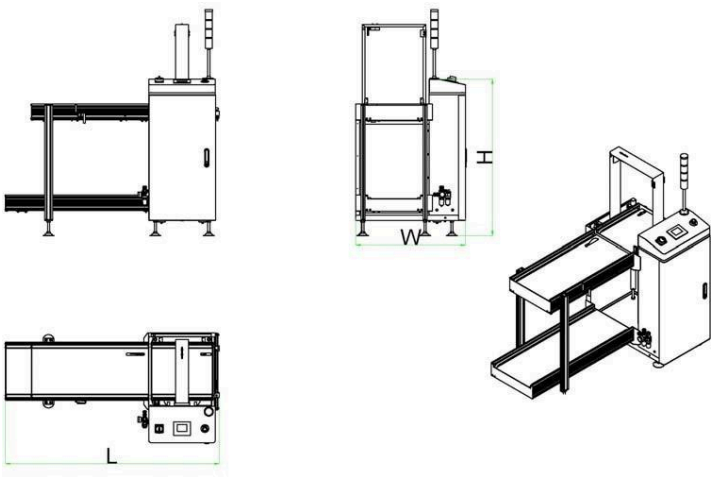

MAGAZINE LOADER & UNLOADER

Multi Magazine Unloader

MU-250A-CT | MU-330A-CT | MU-390A-CT | MU-460A-CT

02 / 06



APPLICATION

The Multi Magazine Unloader is used at the end of the line for unloading of PCBs from the production line. An arriving PCB is taken up by the attached conveyor and then pushed into the magazine by the pusher. The magazine indexes to the next position and is ready for the following unloading cycle.

FEATURES

- Controlled by Omron PLC.
- Easy operation by touch screen.
- Multiple pitches selectable.
- Automatic magazine change-over.
- Tower light display for machine status.
- 3 magazines loading capability.
- SMEMA interface.
- CE certified.

Multi Magazine Unloader

SPECIFICATIONS

MODEL	MU-250A-CT	MU-330A-CT	MU-390A-CT	MU-460A-CT
Size	M	L	LL	XL
Power	AC 110/220V ±10V, 50/60 Hz			
Air Pressure	4 - 6 kgf/cm²			
Fixed Rail	Front			
PCB Size	350 × (50 - 250) mm	460 × (50 - 330) mm	535 × (50 - 390) mm	535 × (50 - 460) mm
Transfer Height	900 ±20 mm or Specify			
Transfer Direction	left to right or right to left (option)			
Magazine Rack Size	350 × 320 × 563 mm	460 × 400 × 563 mm	535 × 460 × 570 mm	535 × 530 × 570 mm
Pitches	1 - 50, 10 mm pitch			
Machine Dimension	1685 × 745 × 1200 mm	1920 × 820 × 1200 mm	2165 × 880 × 1200 mm	2165 × 950 × 1200 mm
Machine Weight	240 kg	270 kg	290 kg	310 kg

* Other options available on request.

DIMENSIONS

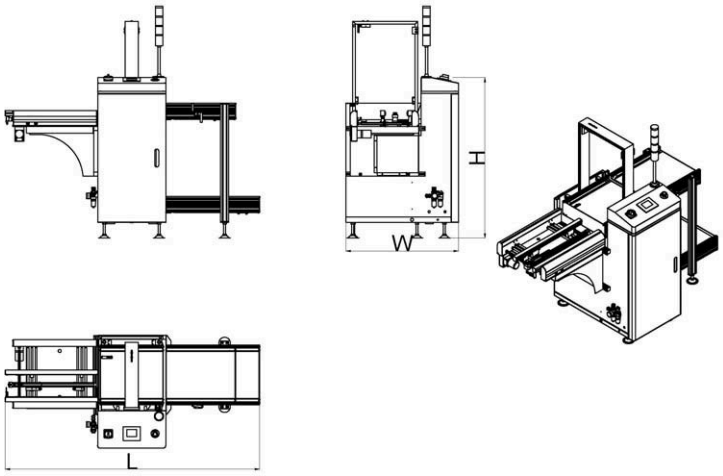

MAGAZINE LOADER & UNLOADER

Single Magazine Loader

ML-250A-ST | ML-330A-ST | ML-390A-ST | ML-460A-ST

03 / 06



APPLICATION

The Single Magazine Loader is used at the starting of the line for loading of PCBs to the production line. The unit loads the production line automatically by pushing PCBs out of a magazine onto the conveyor of the down-stream machine.

FEATURES

- Controlled by Omron PLC.
- Easy operation by touch screen.
- Multiple pitches selectable.
- Tower light display for machine status.
- 1 magazine loading capability, discharge magazine from the rear of machine.
- SMEMA interface.
- CE certified.

Single Magazine Loader

SPECIFICATIONS

MODEL	ML-250A-ST	ML-330A-ST	ML-390A-ST	ML-460A-ST
Size	M	L	LL	XL
Power	AC 110/220V ±10V, 50/60 Hz			
Air Pressure	4 - 6 kgf/cm²			
Fixed Rail	Front			
PCB Size	350 × (50 - 250) mm	460 × (50 - 330) mm	535 × (50 - 390) mm	535 × (50 - 460) mm
Transfer Height	900 ±20 mm or Specify			
Transfer Direction	left to right or right to left (option)			
Magazine Rack Size	350 × 320 × 563 mm	460 × 400 × 563 mm	535 × 460 × 570 mm	535 × 530 × 570 mm
Pitches	1 - 50, 10 mm pitch			
Machine Dimension	1140 × 1060 × 1200 mm	1350 × 1220 × 1200 mm	1525 × 1340 × 1200 mm	1525 × 1480 × 1200 mm
Machine Weight	170 kg	190 kg	210 kg	230 kg

* Other options available on request.

DIMENSIONS

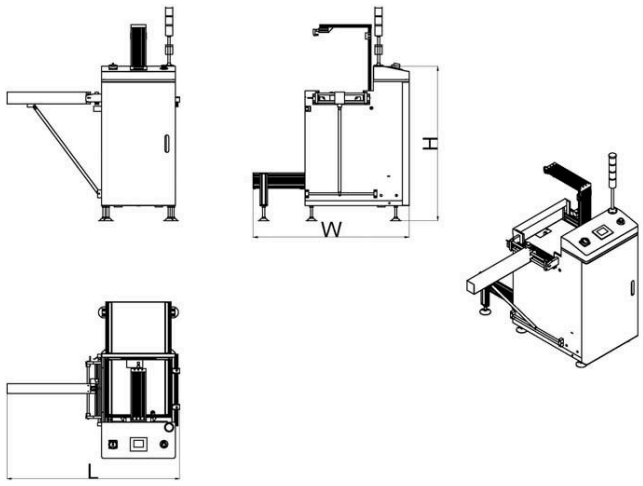

MAGAZINE LOADER & UNLOADER

Single Magazine Unloader

MU-250A-ST | MU-330A-ST | MU-390A-ST | MU-460A-ST

04 / 06



APPLICATION

The Single Magazine Unloader is used at the end of the line for unloading of PCBs from the production line. An arriving PCB is taken up by the attached conveyor and then pushed into the magazine by the pusher. The magazine indexes to the next position and is ready for the following unloading cycle.

FEATURES

- Controlled by Omron PLC.
- Easy operation by touch screen.
- Multiple pitches selectable.
- Tower light display for machine status.
- 1 magazine loading capability, discharge magazine from the rear of machine.
- SMEMA interface.
- CE certified.

Single Magazine Unloader

SPECIFICATIONS

MODEL	MU-250A-ST	MU-330A-ST	MU-390A-ST	MU-460A-ST
Size	M	L	LL	XL
Power	AC 110/220V ±10V, 50/60 Hz			
Air Pressure	4 - 6 kgf/cm²			
Fixed Rail	Front			
PCB Size	350 × (50 - 250) mm	460 × (50 - 330) mm	535 × (50 - 390) mm	535 × (50 - 460) mm
Transfer Height	900 ±20 mm or Specify			
PCB Direction	left to right or right to left (option)			
Magazine Rack Size	350 × 320 × 563 mm	460 × 400 × 563 mm	535 × 460 × 570 mm	535 × 530 × 570 mm
Pitches	1 - 50, 10 mm pitch			
Machine Dimension	1120 × 1060 × 1200 mm	1280 × 1220 × 1200 mm	1460 × 1340 × 1200 mm	1460 × 1480 × 1200 mm
Machine Weight	200 kg	210 kg	230 kg	250 kg

* Other options available on request.

DIMENSIONS

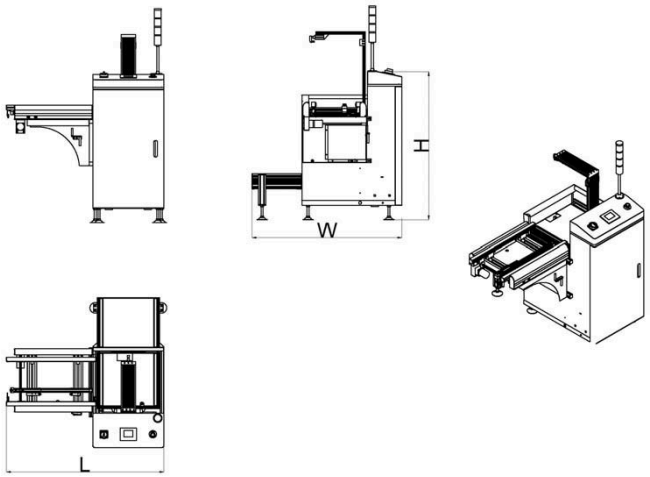

ADJUSTABLE LOADER & UNLOADER

Adjustable Multi Magazine Loader

ML-460AC4-CT

05 / 06



APPLICATION

The Adjustable Multi Magazine Loader is used at the starting of the line for loading of PCBs to the production line. The unit loads the production line automatically by pushing PCBs out of a magazine onto the conveyor of the downstream machine.

FEATURES

- Controlled by Omron PLC.
- Easy operation by touch screen.
- Multiple pitches selectable.
- Automatic magazine change-over.
- Tower light display for machine status.
- 3 magazines loading capability.
- SMEMA interface.
- CE certified.

Adjustable Multi Magazine Loader

SPECIFICATIONS

MODEL	ML-460AC4-CT
Power	AC 110/220V ±10V, 50/60 Hz
Air Pressure	4 - 6 kgf/cm²
Fixed Rail	Front
PCB Size	Min.: 50 × 50 mm, Max.: 535 × 460 mm
Transfer Height	900 ±20 mm or Specify
PCB Direction	left to right or right to left (option)
Magazine Rack Size	355 × 320 × 563 mm, 460 × 400 × 563 mm, 535 × 460 × 570 mm, 535 × 530 × 570 mm
Pitches	1 - 50, 10 mm pitch
Machine Dimension	1750 × 1100 × 1200 mm
Machine Weight	290 kg

* Other options available on request.

DIMENSIONS

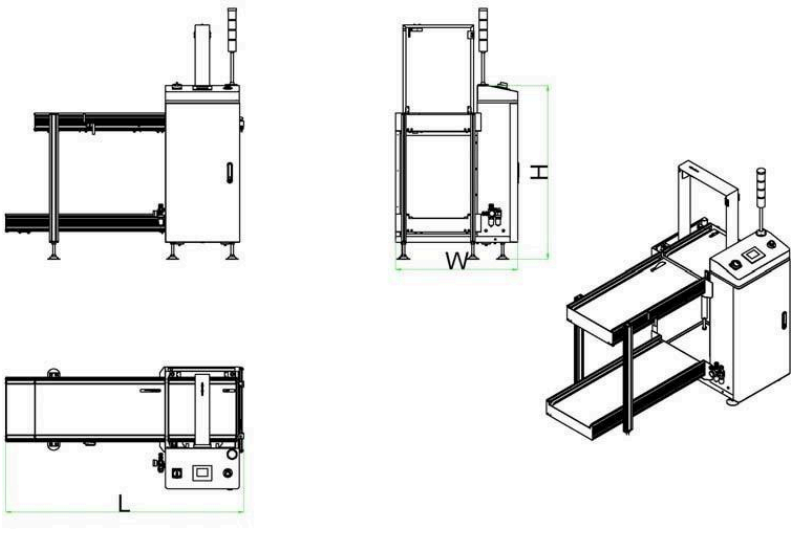

ADJUSTABLE LOADER & UNLOADER

Adjustable Multi Magazine Unloader

MU-460AC4-CT

06 / 06



APPLICATION

The Adjustable Multi Magazine Unloader is used at the end of the line for unloading of PCBs from the production line. An arriving PCB is taken up by the attached conveyor and then pushed into the magazine by the pusher. The magazine indexes to the next position and is ready for the following unloading cycle.

FEATURES

- Controlled by Omron PLC.
- Easy operation by touch screen.
- Multiple pitches selectable.
- Automatic magazine change-over.
- Tower light display for machine status.
- 3 magazines loading capability.
- SMEMA interface.
- CE certified.

Adjustable Multi Magazine Unloader

SPECIFICATIONS

MODEL	MU-460AC4-CT
Power	AC 110/220V ±10V, 50/60 Hz
Air Pressure	4 - 6 kgf/cm²
Fixed Rail	Front
PCB Size	Min.: 50 × 50 mm, Max.: 535 × 460 mm
Transfer Height	900 ±20 mm or Specify
PCB Direction	left to right or right to left (option)
Magazine Rack Size	355 × 320 × 563 mm, 460 × 400 × 563 mm, 535 × 460 × 570 mm, 535 × 530 × 570 mm
Pitches	1 - 50, 10 mm pitch
Machine Dimension	2500 × 1100 × 1150 mm
Machine Weight	330 kg

* Other options available on request.

DIMENSIONS

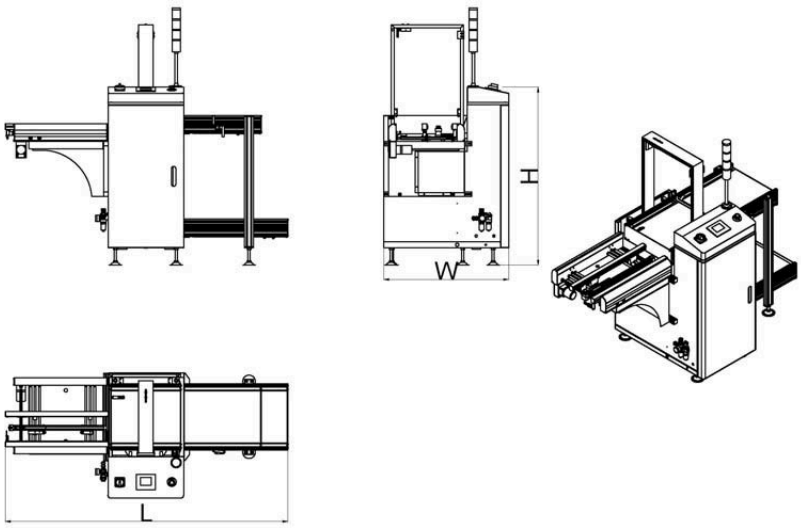

AS TECHNOLOGIES

Let’s talk about your line.

Standard modules or a custom solution: we configure board handling to match your cycle times, line layout and budget.

CONTACT	Peter Spieß
MOBILE	+49 172 5808580
PHONE	+49 7435 513
FAX	+49 7435 8107
E-MAIL	peter.spiess@astechnologies.de
WEB	www.astechnologies.de
ADDRESS	AS Technologies GmbH Bitzestr. 13, 72336 Balingen, Germany

Edition 11/2026. Technical data subject to change. Other options available on request.